Typical Performance

- Ultra wide range input (4:1), 10W output
- Conversion efficiency 91% (Typ)
- Isolation voltage 3000Vdc
- Standby power loss: 0.036W(Typ)
- Ultra fast startup: 1ms(Typ)
- Working temperature: -40°C ~ +85°C
- Input undervoltage, output short circuit, overcurrent, overvoltage protection
- Metal housing, low output ripple
- International standard pin out, PCB direct mounting

20W, ultra wide voltage input, isolated regulated single/dual, DIP package, DC-DC module power supply

RoHS

URF_YMD-20WR3 & URE_YMD-20WR3 series products have 20W output power, 4:1 wide voltage input range, efficiency up to 91%, 1500VDC regular isolation voltage, allowable operating temperature -40℃ to +85℃, with input undervoltage protection, output overvoltage, overcurrent, short-circuit protection, bare metal meets CISPR32/ EN55032 CLASS A, widely used in medical, industrial control, electric power, instrumentation, communication, railway and other fields. EN55032 CLASS A, widely used in medical, industrial control, electric power, instrumentation, communication, railroad and other fields.

Product Coding Rules

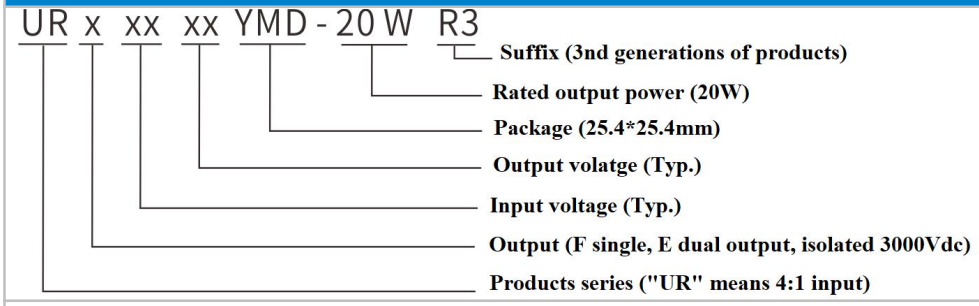

Product List

Product Model	Input voltage range (Vdc)		Output voltage/current		Ripple and noise	Max. capacitive load	Efficiency @ full load
	Nominal value (range value)	Max. value	Output voltage (Vdc)	Output current (mA) (Max.Min.)	Full load (mVp-p) (Typ./Max.)	μF Max.	% (Min./Typ.)
URF2403YMD-20WR3	24 (9~36)	40	3.3	5000/0	30/50	10000	86/88
URF2405YMD-20WR3			5	4000/0	30/50	10000	88/90
URF2409YMD-20WR3			9	2222/0	50/80	10000	86/88
URF2412YMD-20WR3			12	1667/0	50/80	1600	88/90
URF2415YMD-20WR3			15	1333/0	50/80	1000	87/89
URF2424YMD-20WR3			24	833/0	50/80	500	89/91
URE2405YMD-20WR3			±5	±2000/0	30/50	2000	85/87
URE2409YMD-20WR3			±9	±1111/0	50/80	2000	86/88
URE2412YMD-20WR3			±12	±833/0	50/80	800	88/90
URE2415YMD-20WR3			±15	±667/0	50/80	600	88/90
URE2424YMD-20WR3			±24	±417/0	50/80	470	86/88

URF4803YMD-20WR3	48 (18-75)	80	3.3	5000/0	30/50	10000	86/88
URF4805YMD-20WR3			5	4000/0	30/50	10000	88/90
URF4809YMD-20WR3			9	2222/0	50/80	10000	86/88
URF4812YMD-20WR3			12	1667/0	50/80	1600	89/91
URF4815YMD-20WR3			15	1333/0	50/80	1000	89/91
URF4824YMD-20WR3			24	833/0	50/80	500	89/91
URE4805YMD-20WR3		80	±5	±2000/0	30/50	2000	84/86
URE4809YMD-20WR3			±9	±1111/0	50/80	2000	86/88
URE4812YMD-20WR3			±12	±833/0	50/80	800	87/89
URE4815YMD-20WR3			±15	±667/0	50/80	600	87/89
URE4824YMD-20WR3			±24	±417/0	50/80	470	88/90

Note: 1. Due to limited space, the above is only a typical product list, if you need products other than those listed, please contact our sales department.
2. Maximum capacitive load indicates the maximum capacitive load that can be connected to +Vo or -Vo. If this value is exceeded, the product will not start normally.
3. Input voltage exceeding the maximum value may cause permanent damage to the product.

Test Conditions: Unless otherwise specified, all parameters are measured at nominal input voltage, purely resistive rated load and room temperature of 25℃.

Input Features

Items	Working condition		Min.	Typ.	Max.	Unit
Input current (full load/no load)	24VDC nominal input series, nominal input voltage	3.3V	-	782/30	800/50	mA
		5V/9V	-	926/35	947/55	
		12V	-	926/6	947/15	
		15V	-	916/6	937/15	
		24V	-	916/10	937/20	
		±5V/9V	-	957/25	980/35	
		±12V	-	926/1.5	947/2	
		±15V	-	926/1.5	937/2	
		±24V	-	926/1.5	937/2	
	48VDC nominal input series, nominal input voltage	3.3V	-	391/15	400/30	
		5V/9V	-	463/20	474/30	
		12V	-	458/3	469/15	
		15V	-	458/3	469/15	
		24V	-	458/4	469/15	
		±5V/9V	-	484/1	496/1.5	
		±12V	-	458/1	469/1.5	
		±15V	-	458/1	469/1.5	
		±24V	-	458/2	469/1.5	
Reflected ripple current	Nominal input voltage		-	30	-	mA
Impulse voltage (1sec.max)	24VDC nominal input series		-0.7	-	50	VDC
	48VDC nominal input series		-0.7	-	100	
Start voltage	24VDC nominal input series		-	-	9	

Input under-voltage protection	48VDC nominal input series	-	-	18	
	24VDC nominal input series	5.5	6.5	-	
	48VDC nominal input series	12	15.5	-	
Start time	Nominal input voltage and constant resistance	-	10	-	mS
Input filter type		PI type			
Hot plug		Not support			
CNT (Ctrl)*	Module turned on	Ctrl suspended or connected to TTL high (3.5-12VDC)			
	Module turned off	Ctrl to GND or low level (0-1.2VDC)			
	Input current at shutdown	-	2	7	mA

Note: *The voltage at the Ctrl control pin is relative to the input pin, GND.

Output Features

Items	Working and testing condition	+Vo1			-Vo2		
		Min.	Typ.	Max.	Min.	Typ.	Max.
Output load	Percentage of load	0%	-	100%	0%	-	100%
Output voltage accuracy		-	±1.0%	±2.0%	-	±2.0%	±3.0%
Linear rate of adjustment	Input voltage range	-	±0.2%	±0.5%	-	±1.5%	±2%
Load adjustment rate	20%~100% rated load, balance the load	-	±0.5%	±1%	-	±4.0%	±5.0%
Ripple & Noise	Pure resistive load, 20MHz bandwidth, peak to peak, 5%~100% load	-	50mVp-p	80mVp-p	-	50mVp-p	80mVp-p
Start delay time		-	1ms	-	-	1ms	-
Output voltage adjustment	Input voltage range	-	-	±10%	-	-	-
Dynamic response step deviation	25% nominal load step	-	±3.0%	±5.0%	-	±3.0%	±5.0%
Dynamic response recovery time		-	300μs	500μs	-	300μs	500μs
Output over-voltage protection	Full voltage range input	110% Vo	-	160%Vo			
Output over-current protection	Full voltage range input	110% Io	150% Io	200% Io			
Output short-circuit protection	Full voltage range input	Sustainable, self-recovery					

Note: ① For models with output voltage of ±5VDC and ±9VDC, the maximum output voltage accuracy is ±5% under 0%-5% load conditions;
② When tested under 0%-5% load condition, the load regulation rate is ±5%;
③ 0% - 5% load ripple & noise is less than or equal to 5% Vo. Ripple and noise test method twisted pair test method, you can add capacitive load on the output to reduce the light load ripple.

General Characteristics

Items	Working condition	Min.	Typ.	Max.	Unit
Insulation voltage	Input-Output, test time 1 minute, leakage current less than 1mA	3000	--	--	VDC
Insulation resistance	Input-output, isolation voltage: 500VDC	1000	--	--	MΩ
Isolation capacitance	Input-output, 100KHz/0.1V	--	1000	--	pF
Working temperature	Use the reference temperature derating curve	-40	--	+85	℃
Storage temperature		-40	--	+125	
Shell temperature rise		--	--	+100	
Storage humidity	No condensation	5	--	95	%RH
Solder resistance	The solder joint is 1.5mm away from the shell, 10s	--	--	+300	℃
Switching frequency	PWM type	--	250	--	KHz
Vibration		10-55Hz, 10G, 30 Min. along X, Y and Z			
Shell material		Aluminum alloy shell			
Minimum time between failures	MIL-HDBK-217F@25℃	--	$2X10^5$	--	Hrs

Product Features Curve

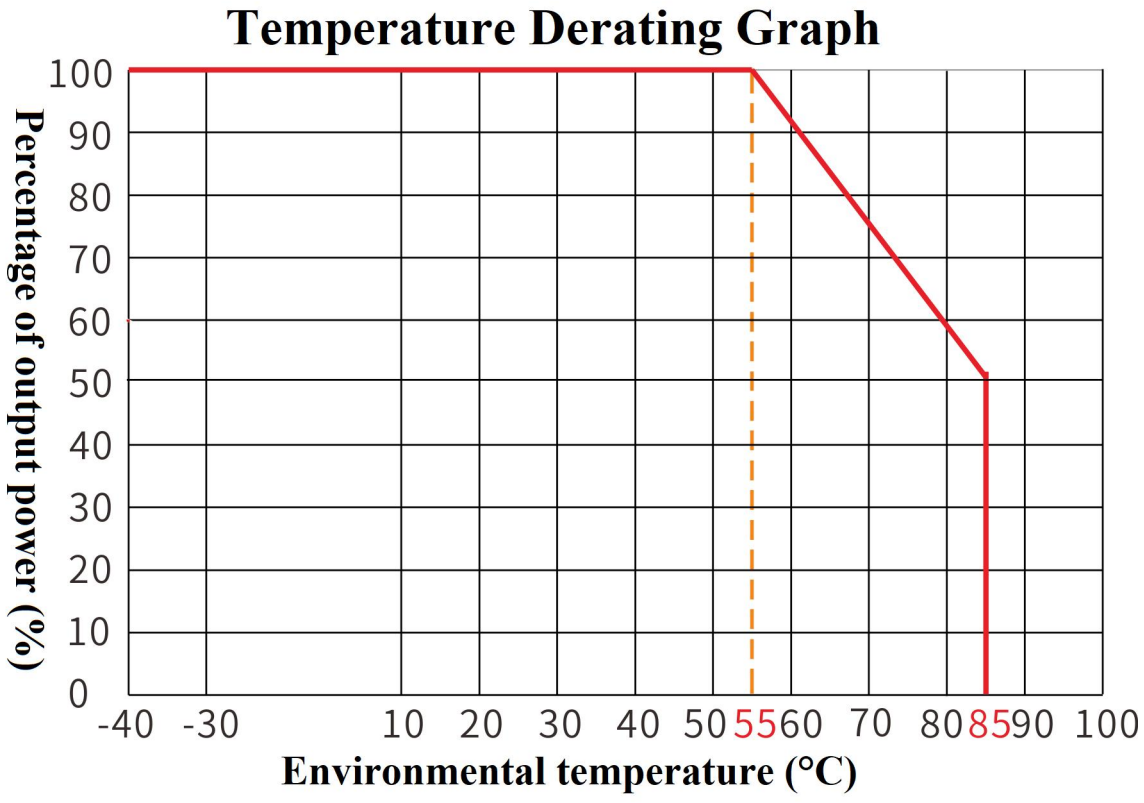

Reference Design

1. Recommended Test Circuit

General recommended capacitance: C1: 47-100μF; C2, C3: 10-22μF .

All DC/DC converters of this series are tested according to the recommended test circuit (Figure 1) before shipment.

If further reduction of input and output ripple is required, the input and output external capacitors C1, C2, C3 can be increased or capacitors with small series equivalent impedance values can be used, but the capacitance value cannot be larger than the maximum capacitive load of the product.

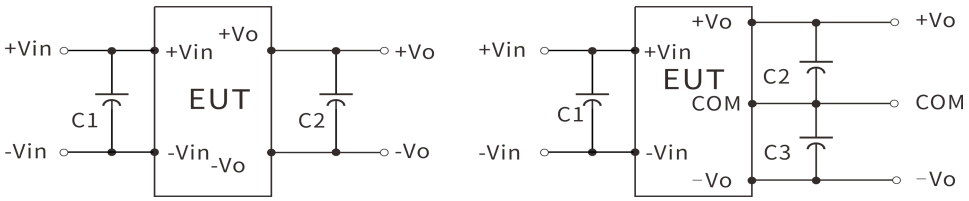

Figure 1

2. EMC Solutions - Recommended Circuits

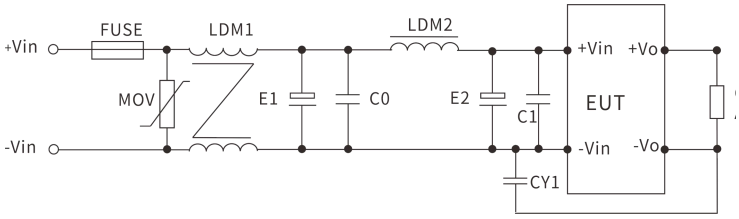

Parameter recommendations:

Items	24V input	48V input
FMSE fuse	Access to the corresponding fuses according to customer needs	
MOV piezoresistor	14D560K	14D101K
LDM1 common mode inductor	10 mH	15 mH
E1, E2 electrolytic capacitor	100μF/50V	100μF/100V
C0, C1 ceramic capacitor	1μF/50V	1μF/100V
LDM2 differential mode inductor	10 μH	15 μH
CY1 safety Y2 capacitor	1nF/250Vac	

3. Output Filter Peripheral Recommended Circuit

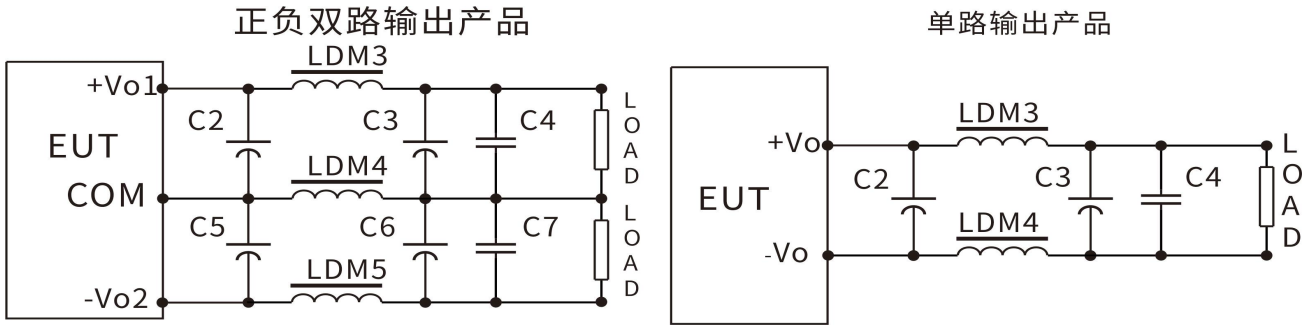

Ripple & noise requirements in general, the peripheral recommended only use C2, C5 can be; ripple & noise requirements of strict; recommended use of the above circuit.

Note: 1. Use high-frequency low-resistance electrolytic capacitors for C2, C3, C5, C6, and the total capacity must not exceed the maximum capacitive load marked in the manual, or the module will not start normally.

2. 3% minimum load must be guaranteed for capacitive load, otherwise it will cause module output abnormality.

3. LDM5 is only used for dual output products.

Parameter recommendations:

Code	3.3V output	±5V or 5V output	±/9V/12V or 9V/12V output	±15V or 15V output	±24V or 24V output
LDM3 inductor	0.47μH	1μH	2.2 μH	2.2 μH	4.7 μH
LDM4 inductor	0.47μH	1μH	2.2 μH	2.2 μH	4.7 μH
LDM5 inductor	-	1μH	2.2 μH	2.2 μH	4.7 μH
C2, C3 electrolytic capacitor	220μF	220μF	100μF	100μF	68μF
C5, C6 electrolytic capacitor	220μF	220μF	100μF	100μF	68μF
C4, C7 ceramic capacitor	1μF/50V				

4. Use of Trim and Calculation of Trim Resistance

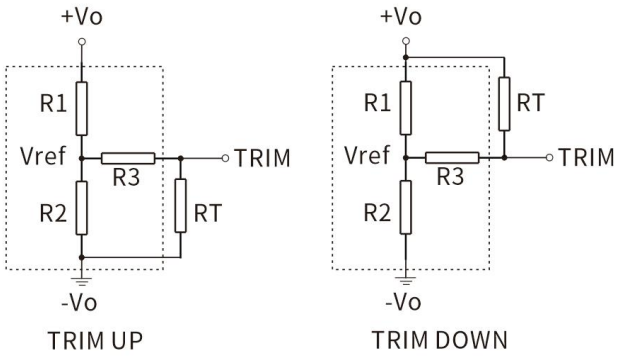

Trim 的使用电路(虚线框为产品内部)

Trim 电阻的计算公式:

$$UP:\quad RT=\frac{®*R2}{R2-®}-R3 \qquad ®=\frac{Vref}{Vo-Vref}*R1$$

$$down:\quad RT=\frac{®*R1}{R1-®}-R3 \qquad ®=\frac{Vo-Vref}{Vref}*R2$$

RT为TRIM电阻

®为自定义参数,无实质含义

Reference notes:

Vout(V)	R1(KΩ)	R2(KΩ)	R3(KΩ)	Vref(V)
3.3	30	18.261	84.5	1.25
5	45.3	14.778	84.5	1.25
9	30	11.441	120	2.5
12	56	14.571	84.5	2.5
15	56	11.218	154	2.5
24	84.5	9.791	84.5	2.5

5. Ripple & Noise Test: (Twisted Pair Method 20MHZ Bandwidth)

Test Methods:

1) Ripple noise is connected using a 12# twisted pair cable, the oscilloscope bandwidth is set to 20MHz, a 100M bandwidth probe and a 0.1uF polypropylene capacitor and a 47uF high-frequency low-resistance electrolytic capacitor are connected in parallel at the probe end, and the oscilloscope samples are taken using the Sample sampling mode.

2) Output ripple noise test schematic:

Connect the power input to the input power supply, the power output is connected to the electronic load through the fixture board, and the test is conducted with a 30cm±2cm sampling line directly from the power output port. Power line according to the size of the output current to select the appropriate diameter of the wire with insulating skin.

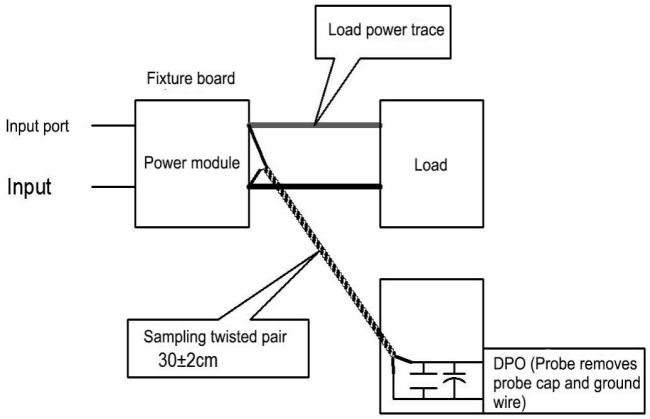

Package Size and Pin Function Diagram

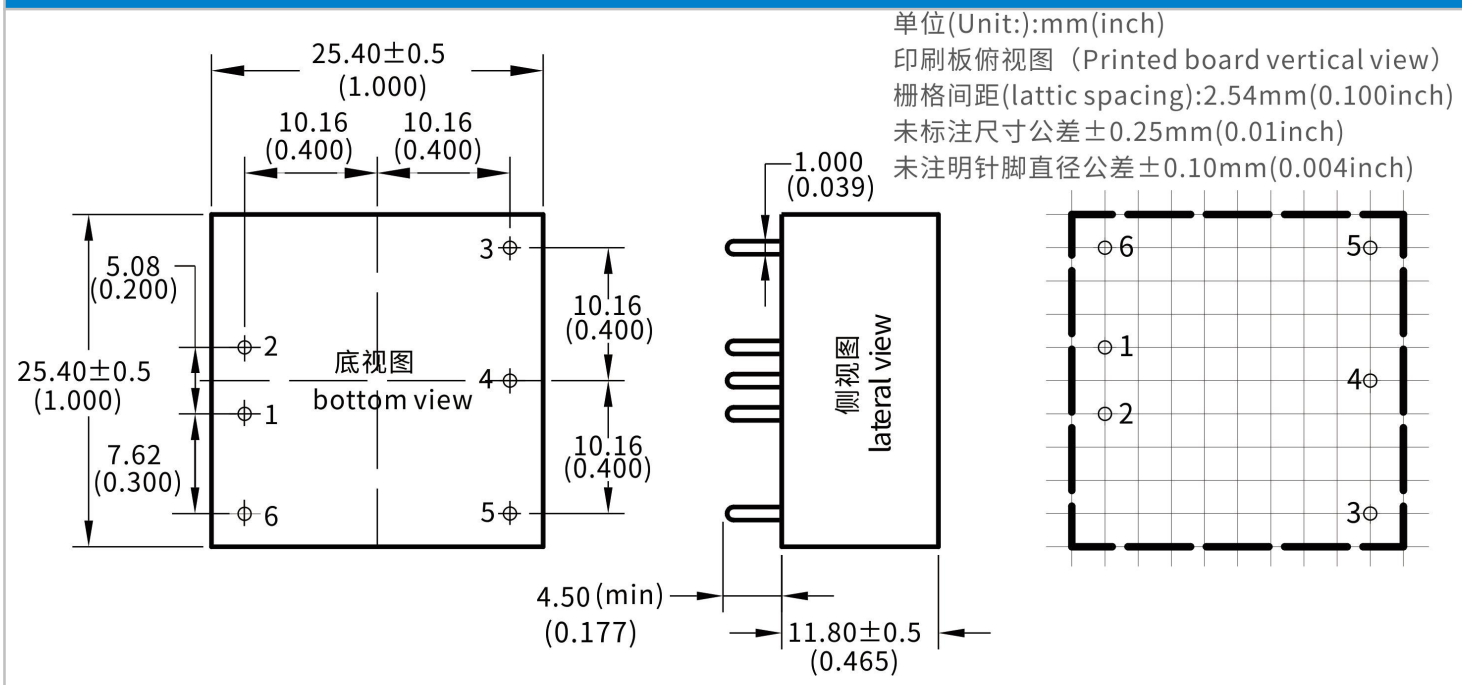

	1	2	3	4	5	6
Single(S)	-Vin	+Vin	+Vo	Trim	-Vo	CTRL
Dual(D)	-Vin	+Vin	+Vo1	COM	-Vo2	CTRL

*Note: If the definition of each pin of the power supply module is not in accordance with the selection manual, the labeling on the physical label should prevail.

URE_YMD-20WR3 series dual output products do not have output voltage regulation terminal.

Package Description

Package code	L x W x H	
YMD	25.4 X25.4X11.8mm	1.000X 1.000 X0.465 inch

Contact

Shenzhen Hi-Link Electronic Co.,Ltd

Add: 17F,Building E, Xinghe WORLD, Minzhi Street, Longhua district, Shenzhen 518131

Web: www.hlktech.net

Email: sales@hlktech.com

Tel：0755-2315 2658